# LG240643-DW

240 x 64 dots + white led backlight, 8-bit parallel, 5V

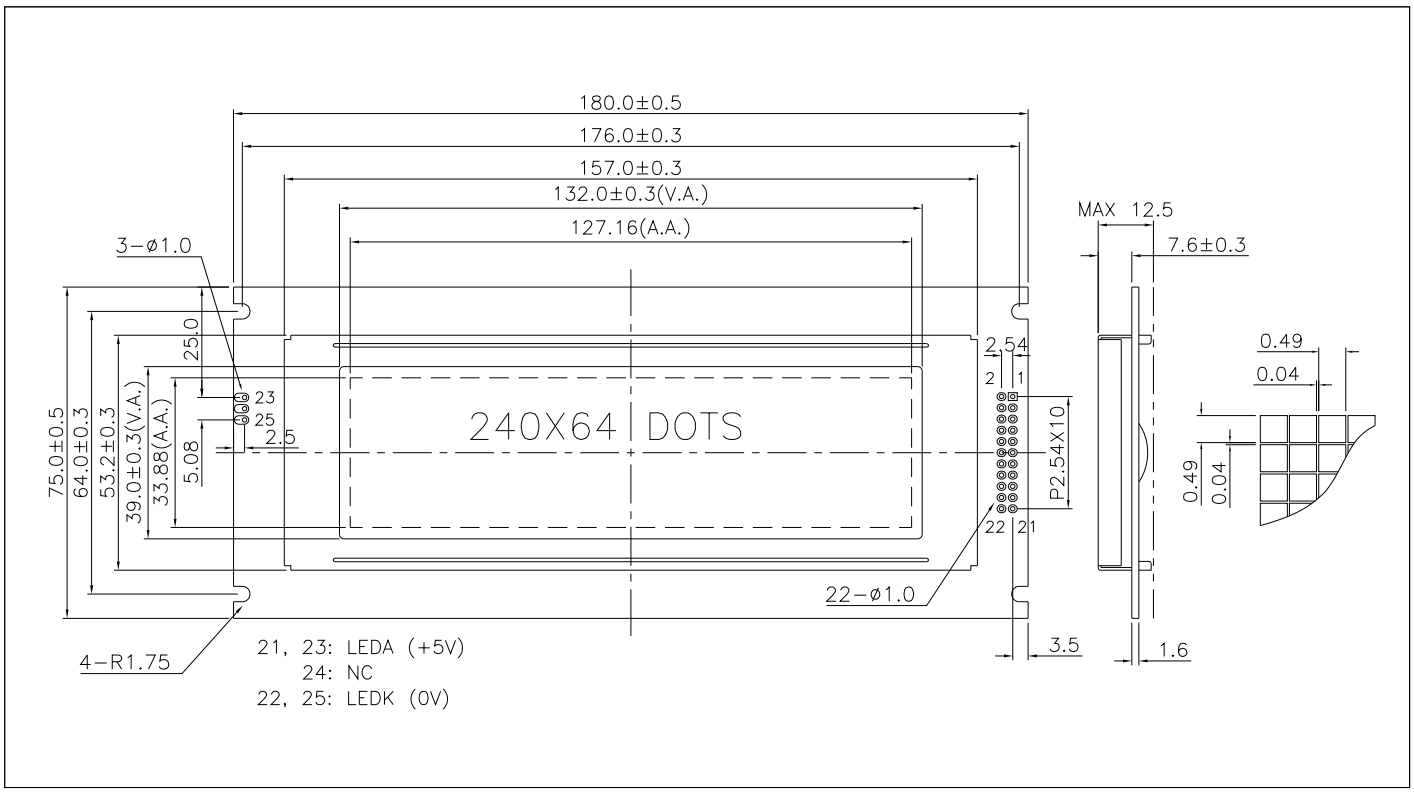


## ABSOLUTE MAXIMUM RATINGS

| Item | Symbol | Min. | Max. | Unit |
|---|---|---|---|---|
| Supply Voltage(Logic) | $V_{DD}$- $V_{SS}$ | -0.3 | 6.0 | V |
| Supply Voltage(LCD) | $V_{DD}$- $V_O$ | -0.3 | 19.0 | V |
| Input Voltage | $V_I$ | -0.3 | $V_{DD}$+ 0.3 | V |
| Operating Temp. | $T_{opr}$ | -20 | 70 | °C |
| Storage Temp. | $T_{stg}$ | -30 | 80 | °C |

## MECHANICAL DATA

| Item | Nominal Dimensions | Unit |
|---|---|---|
| Module Size ( W x H x T ) | 180.0 x 75.0 x 12.5 | mm |
| Viewing Area ( W x H ) | 132.0 x 39.0 | mm |
| Dot Pitch ( W x H ) | 0.53 x 0.53 | mm |
| Dot Size ( W x H ) | 0.49 x 0.49 | mm |
| Weight | Approx. 140 | g |

## ELECTRICAL CHARACTERISTICS ( $V_{DD}$=5V±0.5V )

| Item | Symbol | Test Condition | Min. | Typ. | Max. | Unit |
|---|---|---|---|---|---|---|
| Input High Voltage | $V_{IH}$ | -- | 2.0 | -- | $V_{DD}$ | V |
| Input Low Voltage | $V_{IL}$ | -- | 0 | -- | 0.8 | V |
| Output High Voltage | $V_{OH}$ | $I_{OH}$ = - 0.2mA | 2.4 | -- | $V_{DD}$ | V |
| Output Low Voltage | $V_{OL}$ | $I_{OL}$ = 1.6mA | 0 | -- | 0.4 | V |
| Supply Current | $I_{DD}$ | $V_{DD}$ = 5.0V | -- | 8.0 | 10.0 | mA |
| LCD Driving Voltage | $V_{DD}$ - $V_O$ | Ta=25°C | -- | 12.7 | -- | V |

## PIN CONNECTIONS

| Pin | Symbol | Level | Function |
|---|---|---|---|
| 1 | $V_{SS}$ | 0V | GND |
| 2 | $V_{DD}$ | 5V | Power supply for logic |
| 3 | $V_O$ | -- | Operating voltage for LCD |
| 4 | RS | H/L | H : Data L : Instruction code |
| 5 | R/W | H/L | H : Read L : Write |
| 6 | E | H,H→L | Enable signal |
| 7 | /RST | L | Reset signal. Active "L". |
| 8 | DB0 | H/L | Data bus |
| 9 | DB1 | H/L | |
| 10 | DB2 | H/L | |
| 11 | DB3 | H/L | |
| 12 | DB4 | H/L | |
| 13 | DB5 | H/L | |
| 14 | DB6 | H/L | |
| 15 | DB7 | H/L | |
| 16 | CS1 | H | Chip selection for IC1. Active "H". |
| 17 | CS2 | H | Chip selection for IC2. Active "H". |
| 18 | CS3 | H | Chip selection for IC3. Active "H". |
| 19 | CS4 | H | Chip selection for IC4. Active "H". |
| 20 | $V_{OUT}$ | -10V | Output voltage for LCD driving |

## BLOCK DIAGRAM

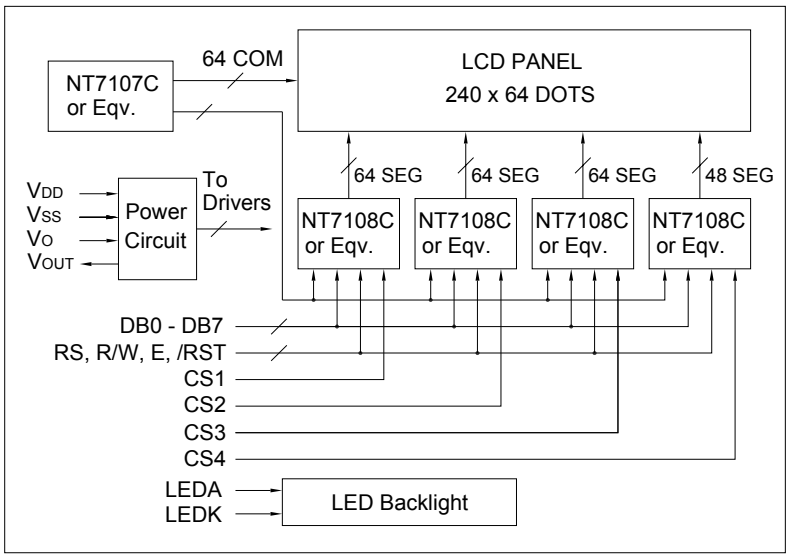


## LED BACKLIGHT SPECIFICATIONS (Ta=25°C)

| Item | Symbol | Typ. | Max. | Unit |
|---|---|---|---|---|
| Forward Voltage | $V_f$ | 2.9 | 3.0 | V |
| Forward Current | $I_f$ | 90 | -- | mA |
| LED Color | White | | | |