LG1601605-DW

160 x 160 dots + white led backlight, 8-bit parallel, 3.3V to 5.5V

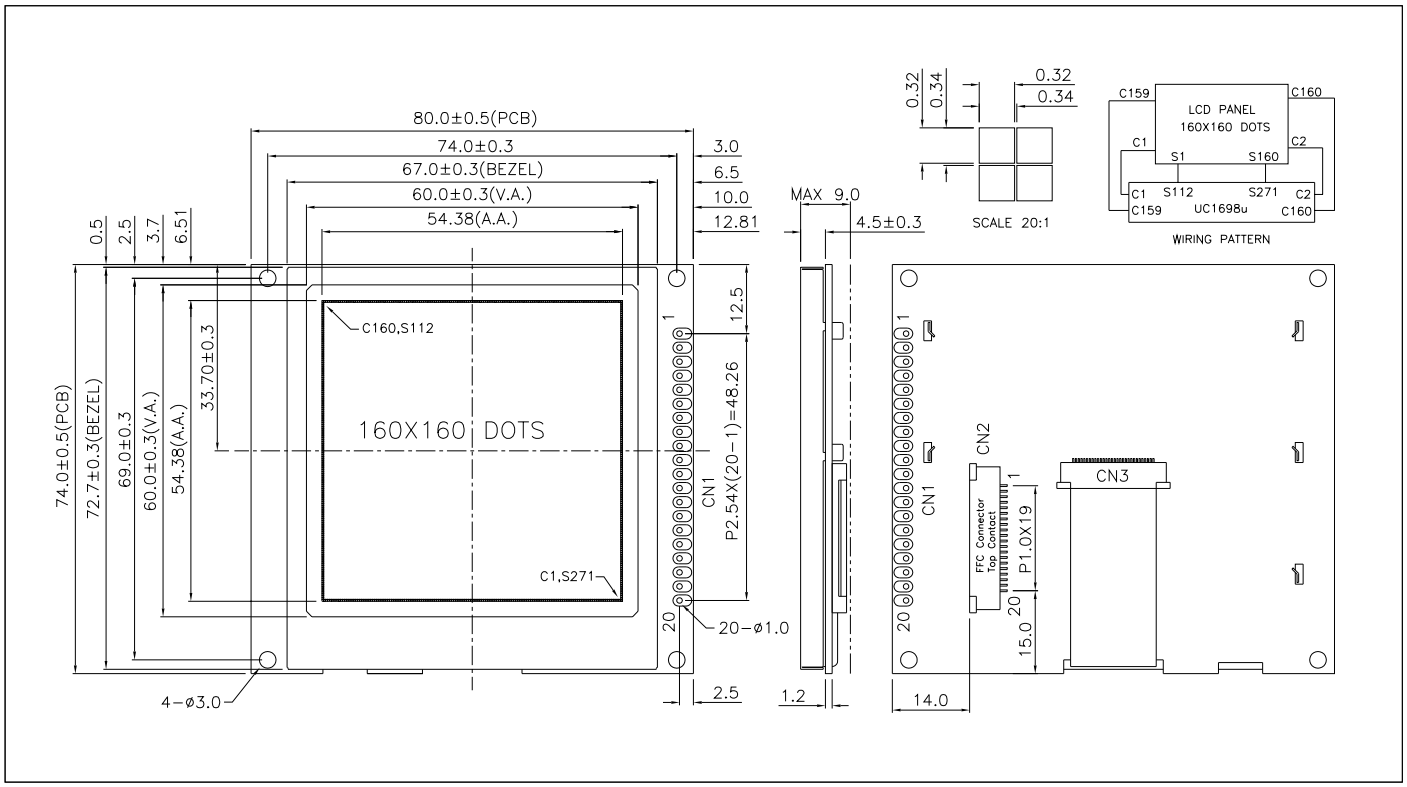

ABSOLUTE MAXIMUM RATINGS

Item	Symbol	Min.	Max.	Unit
Supply Voltage(Logic)	V_{DD} - V_{SS}	-0.3	6.0	V
Supply Voltage(LCD)	V_{LCD} - V_{SS}	-0.3	19.8	V
Input Voltage	V_I	-0.3	V_{DD}+ 0.5	V
Operating Temp.	T_{opr}	-20	70	°C
Storage Temp.	T_{stg}	-30	80	°C

MECHANICAL DATA

Item	Nominal Dimensions	Unit
Module Size (W x H x T)	80.0 x 74.0 x 9.0	mm
Viewing Area (W x H)	60.0 x 60.0	mm
Dot Pitch (W x H)	0.34 x 0.34	mm
Dot Size (W x H)	0.32 x 0.32	mm
Weight	Approx. 50	g

ELECTRICAL CHARACTERISTICS (V_{DD}=3.3V to 5.5V)

Item	Symbol	Test Condition	Min.	Typ.	Max.	Unit
Input High Voltage	V_{IH}	--	2.0	--	V_{DD}	V
Input Low Voltage	V_{IL}	--	0	--	0.8	V
Output High Voltage	V_{OH}	I_{OH} = - 0.1mA	V_{DD}-0.3	--	V_{DD}	V
Output Low Voltage	V_{OL}	I_{OL} = 0.1mA	0	--	0.3	V
Supply Current	I_{DD}	V_{DD} = 5.0V	--	1.2	2.0	mA
LCD Driving Voltage	V_{LCD}-V_{SS}	Ta=25°C	--	16.8	--	V

PIN CONNECTIONS

Pin	Symbol	Level	Function
1	V_{SS}	0V	GND
2	V_{DD}	3.3 to 5.5V	Power supply for logic
3	LEDA	5V	Power supply for LED backlight LEDK is connected to Vss on PCB
4	CD	H/L	CD="H": Display data CD="L": Instruction code
5	/CS	L	Chip selection signal. Active "L".
6	/RST	L	Reset signal. Active "L".
7	D7	H/L	Data bus
8	D6	H/L	
9	D5	H/L	
10	D4	H/L	
11	D3	H/L	
12	D2	H/L	
13	D1	H/L	
14	D0	H/L	
15	/WR	L	Write signal. Active "L".
16	/RD	L	Read signal. Active "L".
17-20	NC	--	No connection

BLOCK DIAGRAM

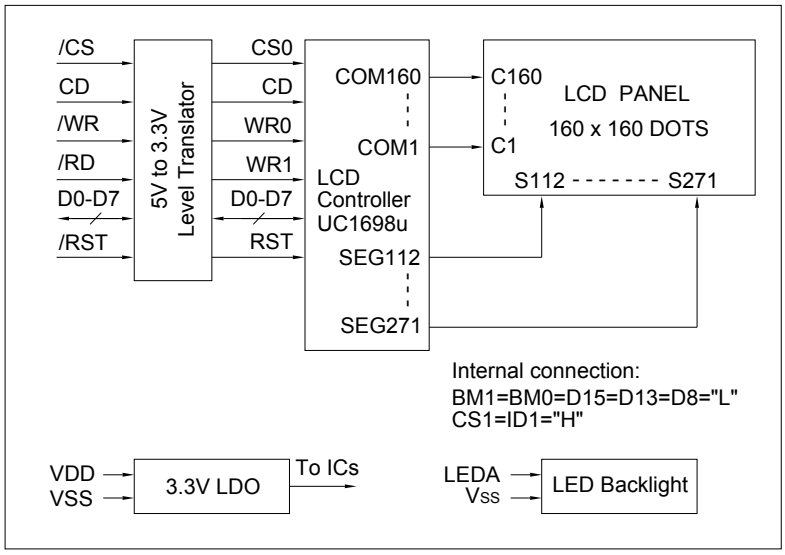

LED BACKLIGHT SPECIFICATIONS (Ta=25°C)

Item	Symbol	Typ.	Max.	Unit
Forward Voltage	V_f	3.1	3.3	V
Forward Current	I_f	75	--	mA
LED Color		White		